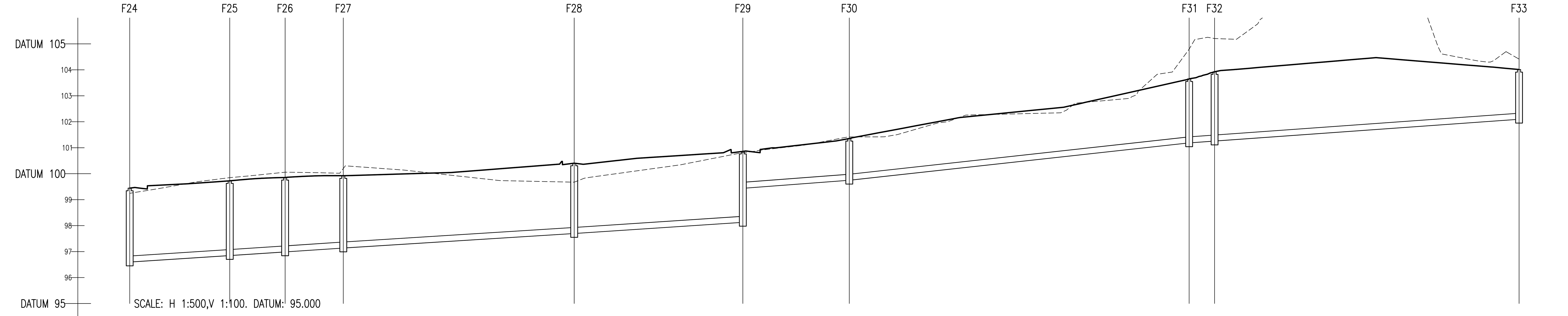

SCALE: H 1:500,V 1:100. DATUM: 95.000

COVER LEVEL	99.443		99.725		99.852		99.921		100.406		100.860		101.355		103.651		103.926		104.011
INVERT LEVEL	96.600	1.007	96.850 / 96.850	1.006	96.990 / 96.990	1.005	97.140 / 97.140	1.004	97.700 / 97.700	1.003	98.130 / 99.440	1.002	99.750 / 99.750	1.001	101.190 / 101.190	1.000 (1)	101.260 / 101.260	1.000	102.100
DEPTH (m)	2.843		2.875		2.862		2.781		2.706		2.730		1.605		2.461		2.666		1.911
DISTANCE (m)		19.28		10.66		11.21		44.49		32.49		20.51		65.48		4.90		58.67	
PIPE SLOPE		1:77		1:76		1:75		1:79		1:76		1:66		1:45		1:70		1:70	
PIPE SIZE		225mm		225mm		225mm		225mm		225mm		225mm		225mm		225mm		225mm	

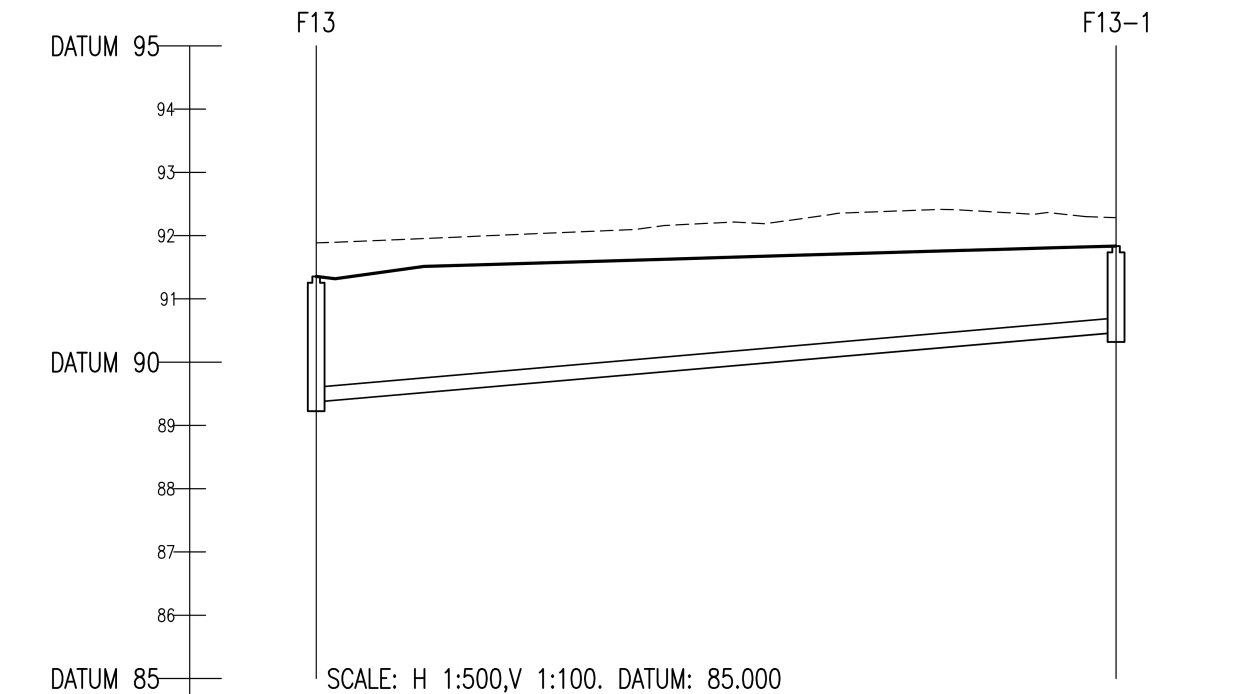

SCALE: H 1:500,V 1:100. DATUM: 85.000

COVER LEVEL	91.355		91.835
INVERT LEVEL	89.375	16.000	90.470
DEPTH (m)	1.980		1.365
DISTANCE (m)		63.22	
PIPE SLOPE		1:58	
PIPE SIZE		225mm	

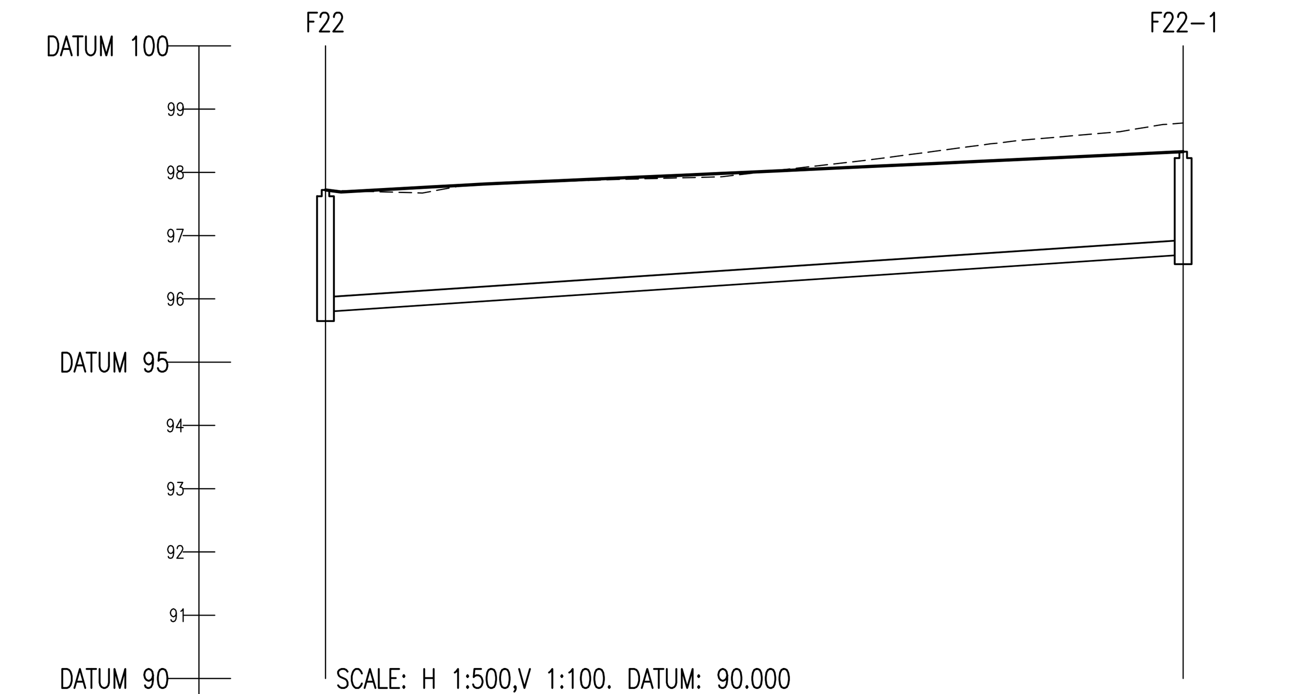

SCALE: H 1:500,V 1:100. DATUM: 90.000

COVER LEVEL	97.722		98.326
INVERT LEVEL	95.800	9.000	96.700
DEPTH (m)	1.922		1.626
DISTANCE (m)		67.79	
PIPE SLOPE		1:75	
PIPE SIZE		225mm	

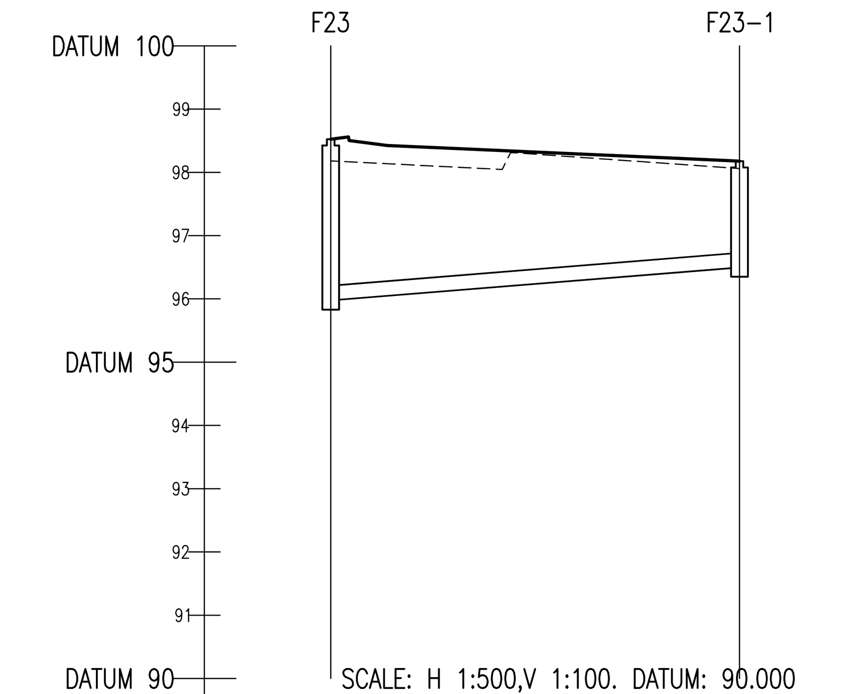

SCALE: H 1:500,V 1:100. DATUM: 90.000

COVER LEVEL	98.525		98.178
INVERT LEVEL	95.980	8.000	96.500
DEPTH (m)	2.545		1.678
DISTANCE (m)		32.33	
PIPE SLOPE		1:62	
PIPE SIZE		225mm	

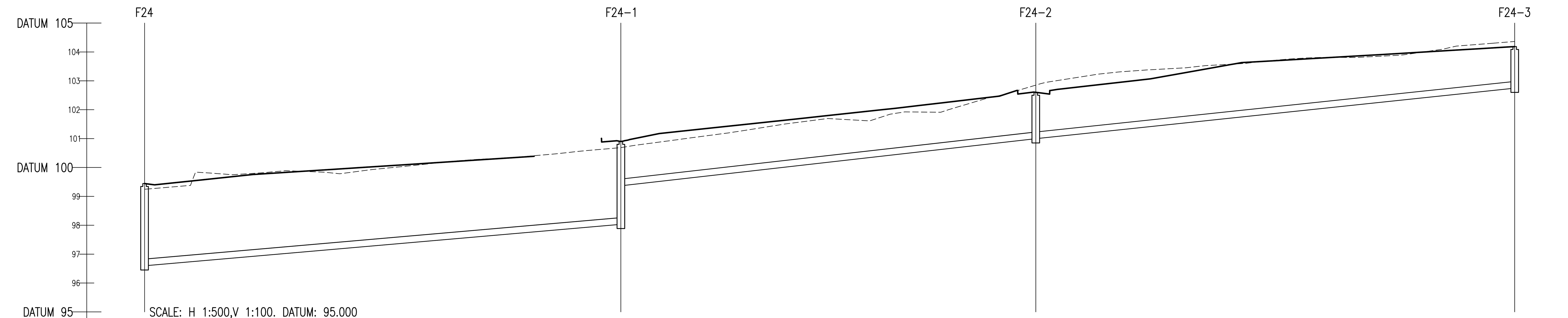

SCALE: H 1:500,V 1:100. DATUM: 95.000

COVER LEVEL	99.443		100.900		102.601		104.185
INVERT LEVEL	96.600	5.002	98.035 / 99.370	5.001	101.000 / 101.000	5.000	102.750
DEPTH (m)	2.843		2.865		1.601		1.435
DISTANCE (m)		82.34		71.73		82.79	
PIPE SLOPE		1:57		1:44		1:47	
PIPE SIZE		225mm		225mm		225mm	

© COPYRIGHT OF THIS DRAWING IS RESERVED BY DBFL CONSULTING ENGINEERS. NO PART SHALL BE REPRODUCED OR TRANSMITTED WITHOUT THEIR WRITTEN PERMISSION.

ON ORIGINAL

0 5 10 15 20 25 30 40 50mm

NOTES:

1. ALL DRAWINGS TO BE CHECKED BY CONTRACTOR ON SITE AND ENGINEER INFORMED OF DISCREPANCIES BEFORE WORK COMMENCES
2. ALL LEVELS ARE IN METRES AND ARE RELATED TO ORDNANCE DATUM
3. CONTRACTOR SHALL SATISFY HIMSELF AS TO THE ACCURACY OF PAVEMENT LEVELS ON SITE PRIOR TO COMMENCEMENT OF WORKS ON SITE
4. ALL WORKS TO BE CONSTRUCTED IN ACCORDANCE WITH THE NRA SPECIFICATION FOR ROAD WORKS UNLESS NOTED OTHERWISE
5. THIS DRAWING IS FOR PLANNING PURPOSES ONLY
6. MANHOLE COVER LEVELS ARE TO CONFORM WITH FINISHED ROAD AND PATH LEVELS
7. WHERE COVER TO PIPE IS LESS THAN 1200mm (ROAD/PATH/VERGE) OR 900mm (OPEN SPACE) SURROUND PIPE IN MINIMUM 150mm CONCRETE

KEY

- - - - - - - - EXISTING GROUND PROFILE
———————— PROPOSED GROUND PROFILE

REV.	DATE	DESCRIPTION	BY	CHKD.

PLANNING

DESIGNED	NCG	PREPARED	PJC
DATE	SEP 2019	CHECKED	DJR

DBFL Consulting Engineers
DUBLIN OFFICE Ormond House, Upper Ormond Quay, Dublin 7, Ireland. PHONE +353 1 400 4000 FAX +353 1 400 4050
WATERFORD OFFICE Unit 2, The Chandlery, 1-2 O' Connell Street, Waterford, Ireland. PHONE +353 51 309 500 FAX +353 51 844 913
EMAIL info@dbfl.ie SITE www.dbfl.ie

PROJECT
LANDS AT NEWCASTLE, SOUTH DUBLIN

DRG. TITLE
LONGITUDINAL SECTIONS THROUGH FOUL SEWER SHEET 2

ARCHITECT
MOLA

SCALE	H 1:500, V 1:100 @A1	FILE REF.	170024-3025
DRG. NO.	170024-3026		.